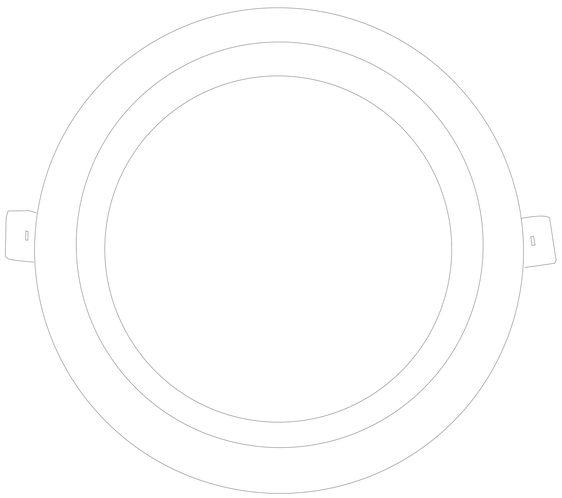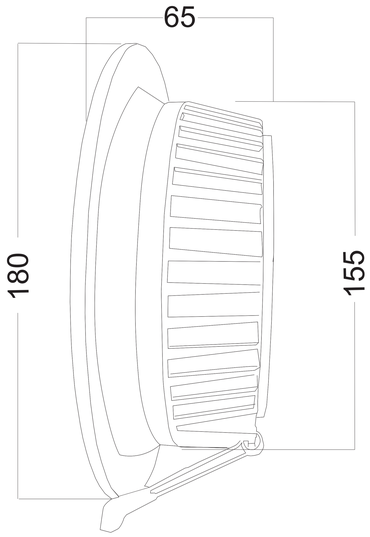DL18891/15W White R